2.10 - SA & Volume Practice

March-27-15
5:16 PM

Name: _____

Unit 2 – Measurement

2.10 – Surface Area & Volume Practice

1) **Name of Polyhedron:** Rectangular Prism

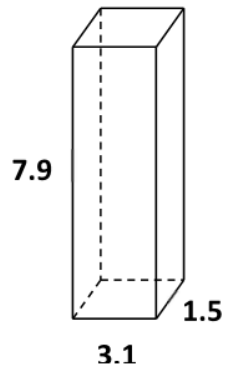

a) **Find the Surface Area**

Front = 7.9 x 3.1 = 24.49
Back = 7.9 x 3.1 = 24.49
Right = 7.9 x 1.5 = 11.85
Left = 7.9 x 1.5 = 11.85
Top = 3.1 x 1.5 = 4.65
Bott = 3.1 x 1.5 = 4.65

Total SA = 81.98 units^2

b) **Find the Volume**

VO = L x W x h
= 7.9 x 3.1 x 1.5
= 36.74 units^3

2) **Name of Polyhedron:** CYLINDER

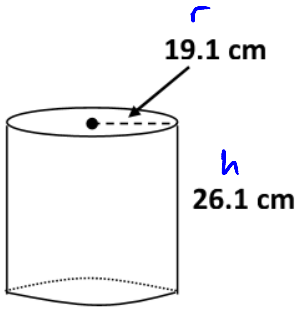

a) **Find the Surface Area**

SA = $2 \times \pi \times r \times h + 2 \times \pi \times r^2$
= $2 \times \pi \times 19.1 \times 26.1 + 2 \times \pi \times 19.1^2$
= 3132.23 + 2292.17
= 5424.4 cm^2

b) **Find the Volume**

Vol = $\pi \times r^2 \times h$
= $\pi \times 19.1^2 \times 26.1$
= 29912.8 cm^3

3) **Name of Polyhedron:** PYRAMID

a) **Find the Surface Area**

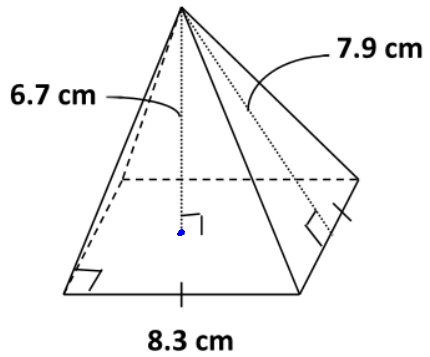

Front = 8.3 × 7.9 ÷ 2 = 32.79

Back = 8.3 × 7.9 ÷ 2 = 32.79

Right = 8.3 × 7.9 ÷ 2 = 32.79

Left = 8.3 × 7.9 ÷ 2 = 32.79

Base = 8.3^2 = 68.89

Total SA = 200.05 cm^2

b) **Find the Volume**

Vol = Area of base × height ÷ 3

= 8.3^2 × 6.7 ÷ 3

= 153.9 cm^3

4) **Name of Polyhedron:** CONE

a) **Find the Surface Area**

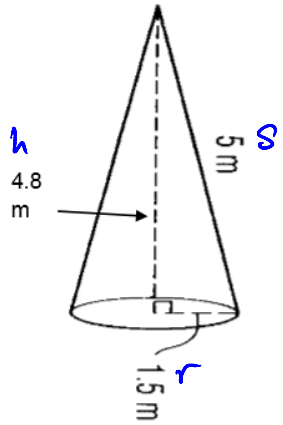

SA = π × r × S + π × r^2

= π × 1.5 × 5 + π × 1.5^2

= 23.56 + 7.07

= 30.63 m^2

b) **Find the Volume**

Vol = π × r^2 × h ÷ 3

= π × 1.5^2 × 4.8 ÷ 3

= 11.3 m^3

5) **Name of Polyhedron:** Sphere

a) **Find the Surface Area**

$SA = 4 \times \pi \times r^2$

$= 4 \times \pi \times 8.75^2$

$= 962.1\ m^2$

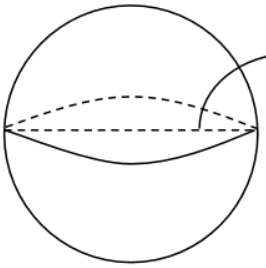

17.5 m = Diam

rad = 17.5 ÷ 2

= 8.75 m

b) **Find the Volume**

$Vol = 4 \times \pi \times r^3 \div 3$

$= 4 \times \pi \times 8.75^3 \div 3 = 2806.2\ m^3$

XS

1) **Name of Polyhedron:** _____

c) **Find the Surface Area**

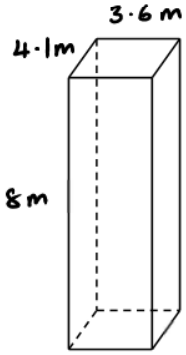

d) **Find the Volume**

2) **Name of Polyhedron: _____**

c) **Find the Surface Area**

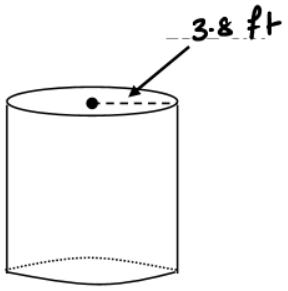

d) **Find the Volume**

3) **Name of Polyhedron: _____**

c) **Find the Surface Area**

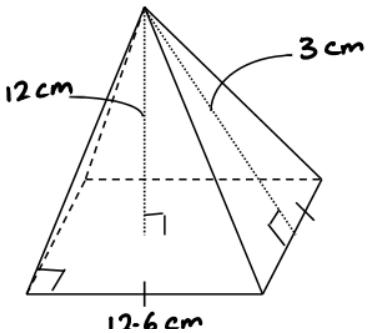

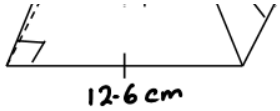

d) **Find the Volume**

4) **Name of Polyhedron: _____**

c) **Find the Surface Area**

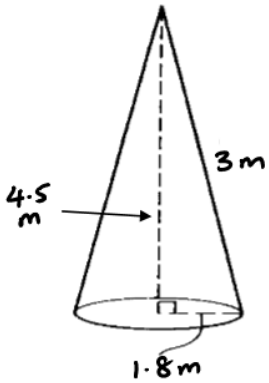

d) **Find the Volume**

5) **Name of Polyhedron: _____**

c) **Find the Surface Area**

b) Name of Polyhedron: _____

c) **Find the Surface Area**

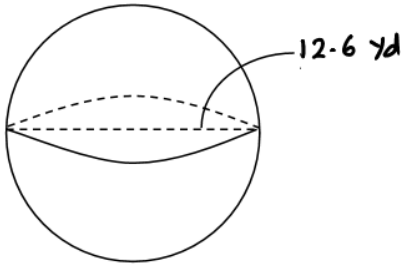

d) **Find the Volume**